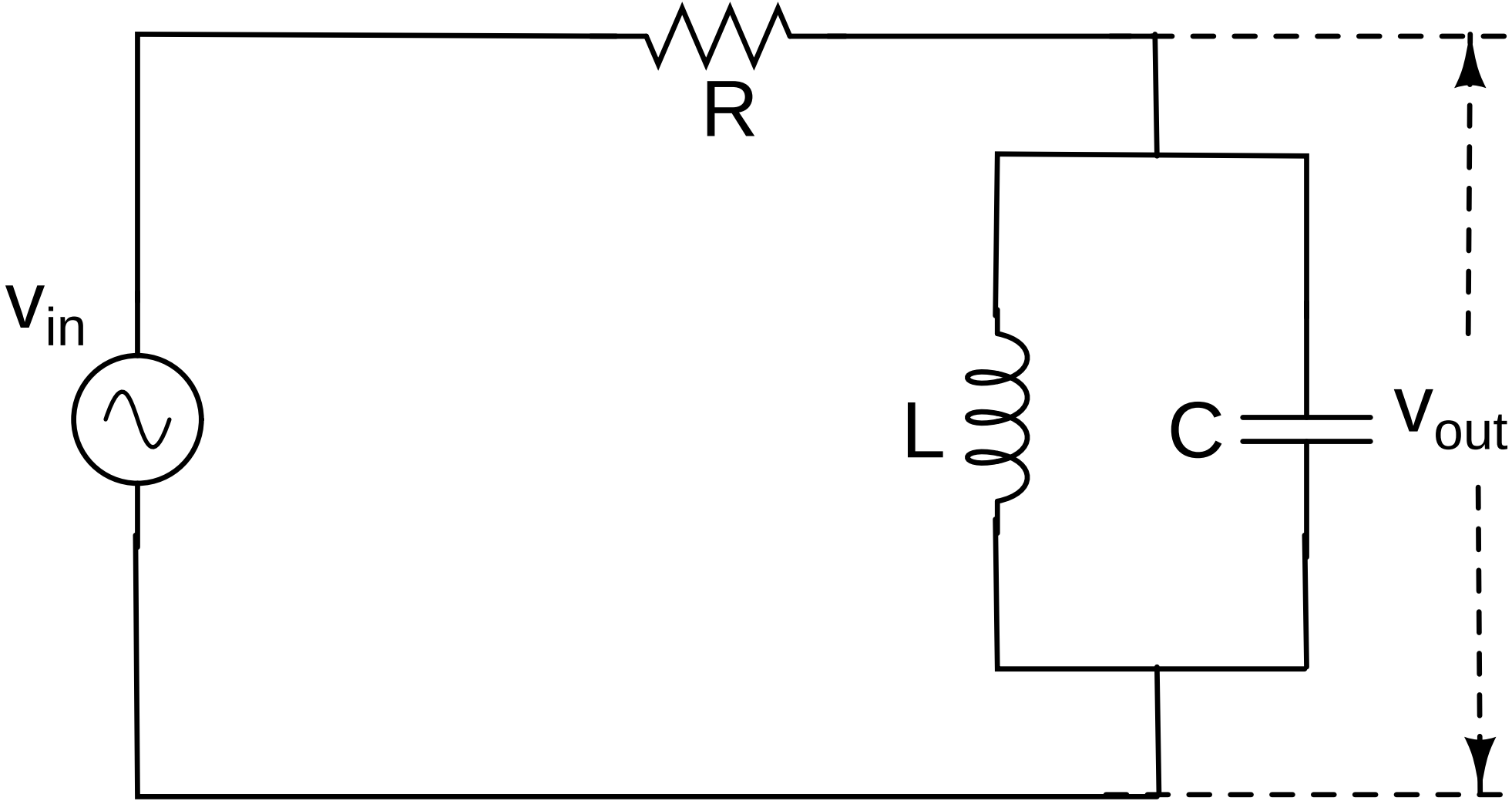
R
V_{in}
L
C
V_{out}