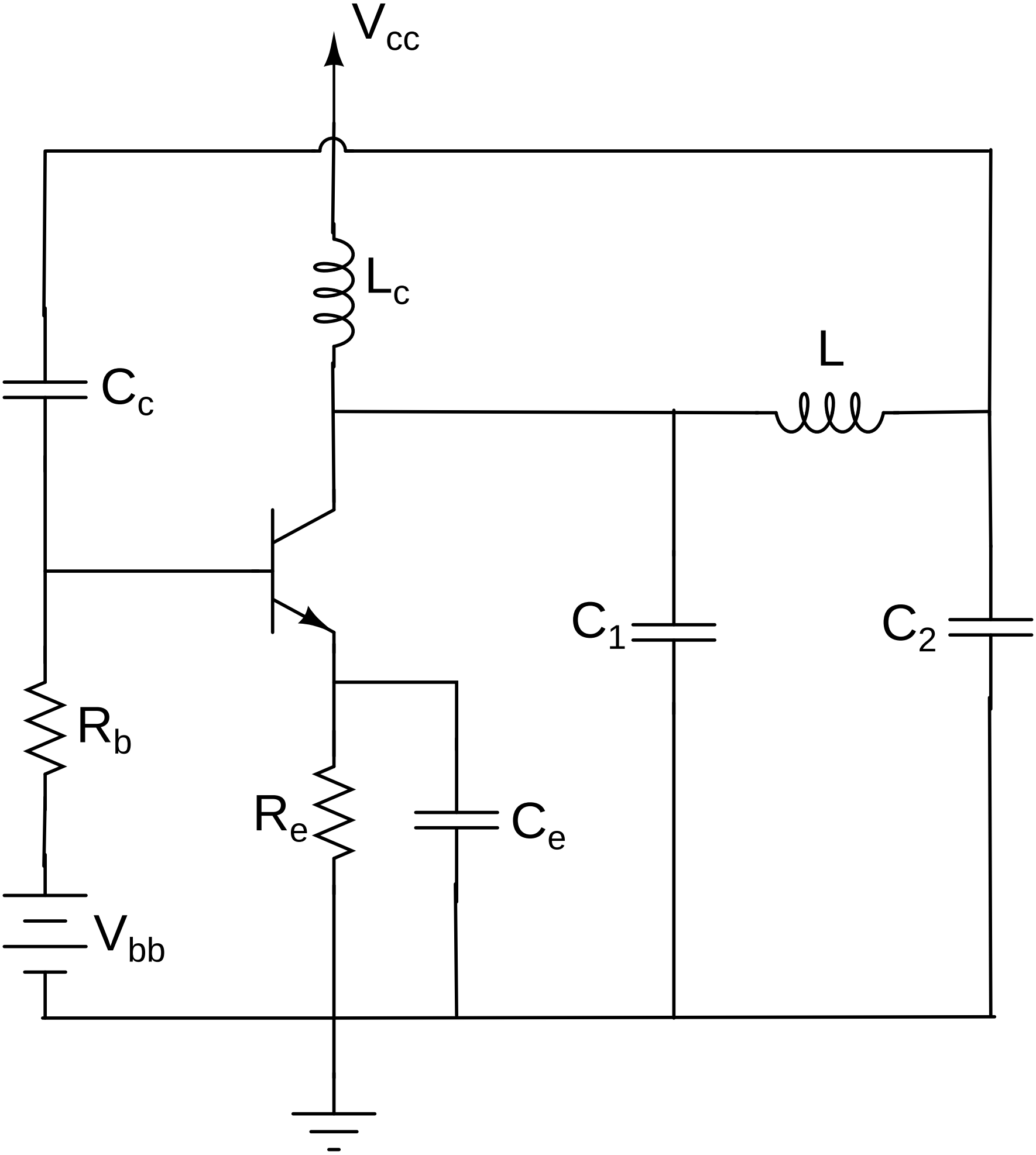
Vcc
Lc
Cc
L
C1
C2
Rb
Re
Ce
Vbb