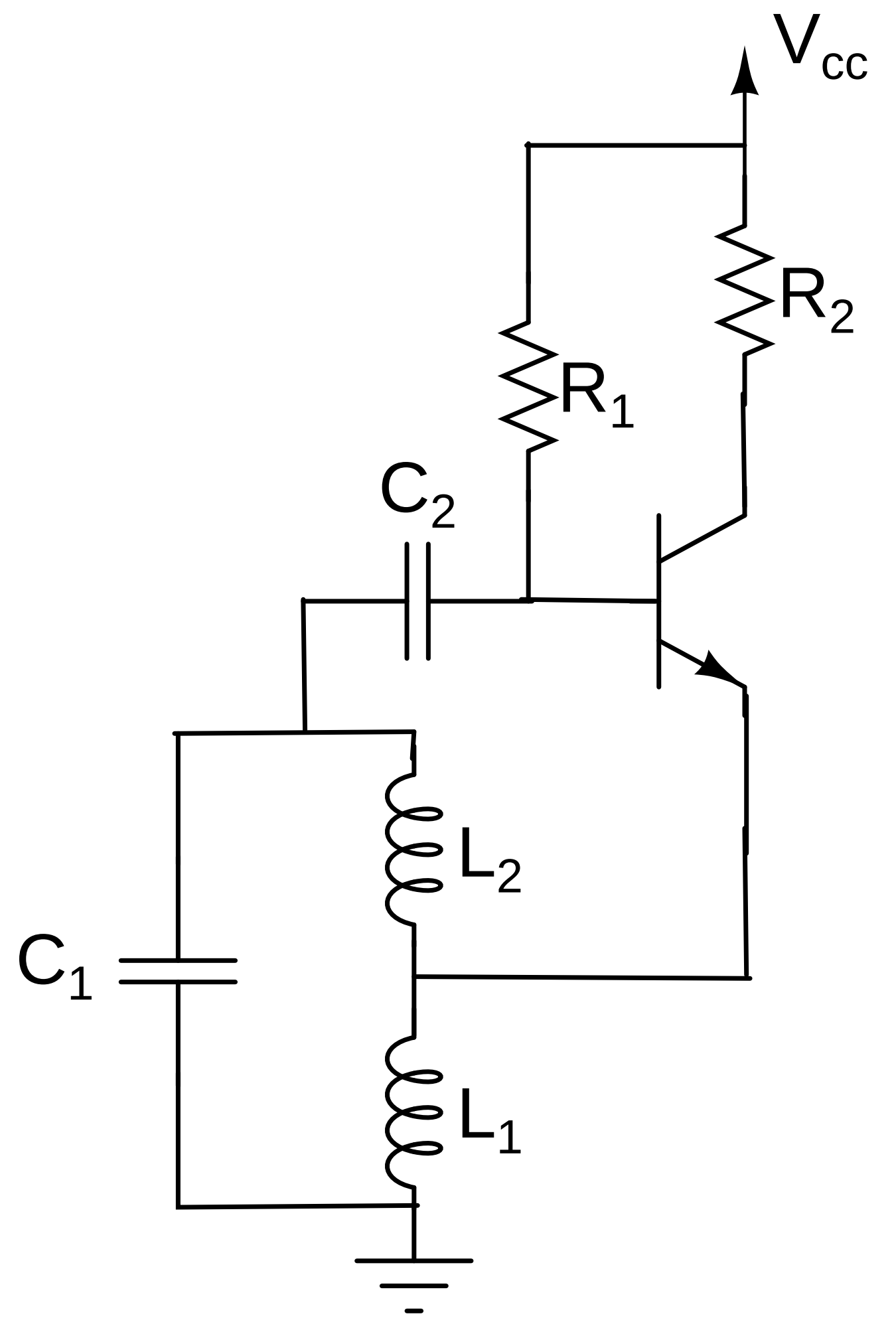
Vcc
R2
R1
C2
L2
C1
L1