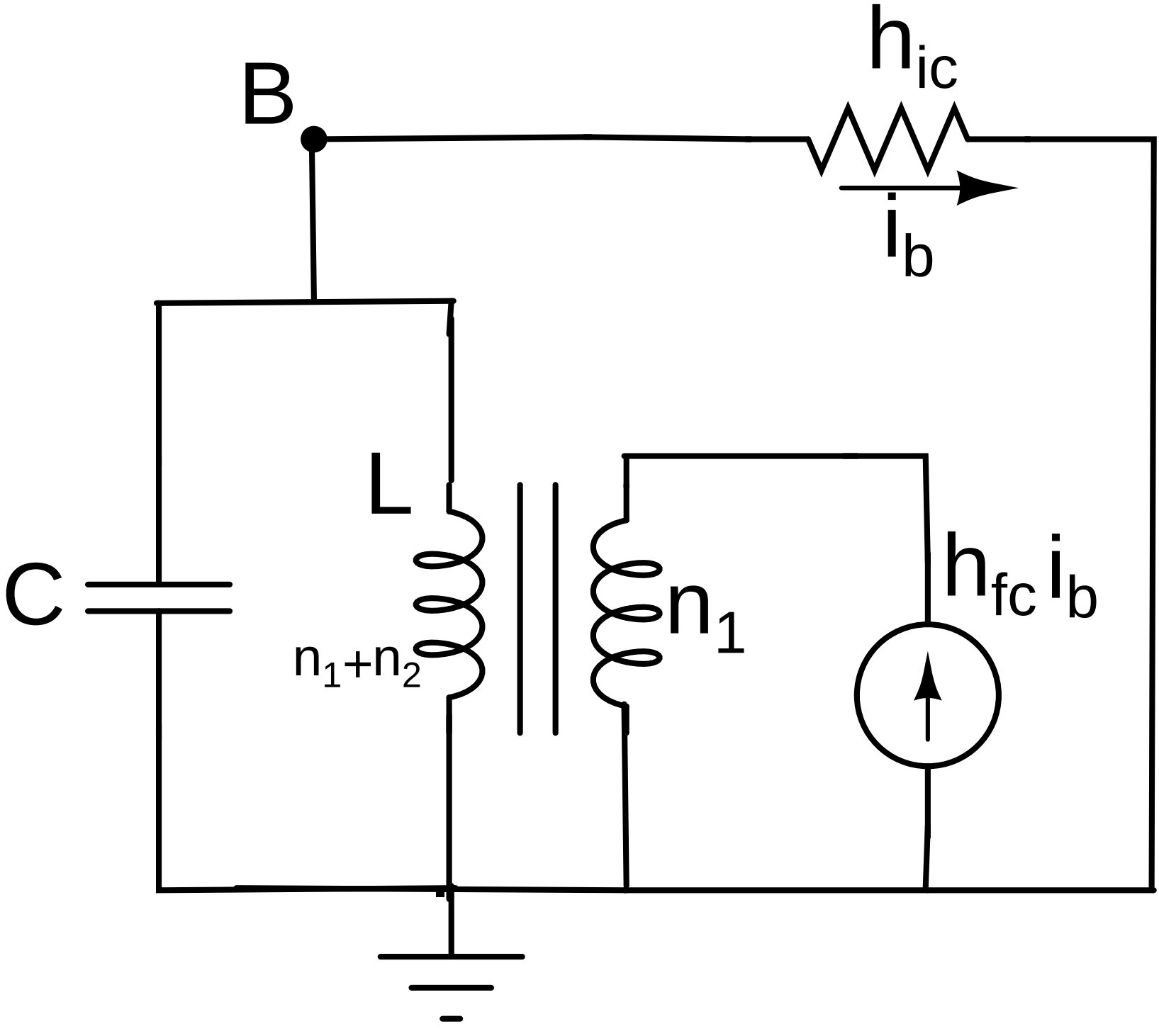
B
h_{ic}
i_b
L
C
n_1+n_2
n_1
$h_{fc}\,i_b$